The Kia EV5.

Movement that inspires

Information at your fingertips.

This mobile brochure allows you to discover the main features and highlights of the Kia EV5 conveniently using your mobile phone. If you require more detailed information on any topic at any point while you browse, simply click the button and you'll be directed to the EV5's full product page, which can also be easily shared.

Discover More >

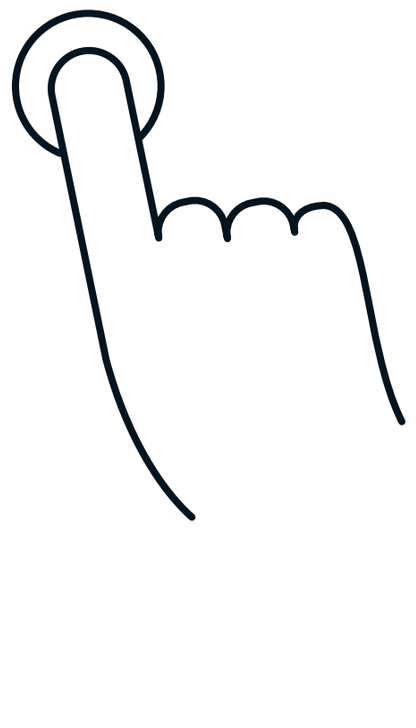

Movement that inspires.



We believe in movement that inspires. Design that makes a statement. Technology that redefines expectations. The Kia EV5 moves family life into a new era of electric mobility. With generous SUV dimensions, tailored comfort and class-leading storage capacity, it blends rugged yet sleek design with smart connected technology for everyday confidence and enjoyment.

Content

01
Design

02
Connectivity &
Convenience

03
Safety Features

04
Powertrain &
Trimlines

05
Accessories

06
Body Colour

07
Rims & Dimensions

Design

Dynamic style. Ideal size.

Exterior Design.

06



A confident new face.

Dynamic lines meet articulate details: the EV5's confident front styling is strikingly modern, with a unique identity that is instantly recognisable.



Unified style, front to back.

Every detail of the EV5's rear design is a unison of strength and sophistication. The Star Map taillights bring one cohesive high-tech signature to the impactful styling.

Discover More >

Exterior Design.

07



Dynamic silhouette.

The EV5’s profile balances elegance with solidity. Sculpted side garnishes reinforce its robust character, while the clean, flush handles add a refined, futuristic edge.



Precision-crafted alloy wheels

Distinctive alloy wheels, crafted in 18" and 19" designs, elevate the EV5’s presence with a modern stance and dynamic detailing.

Discover More >

Interior Design.

08



Optimised space, maximised comfort.

The EV5’s smart proportions make long journeys easier. A high seating position creates a sense of space. The second row leads its class with more than a metre of legroom.



Space that adapts to every moment.

Enjoy the practicality of second-row seats that fold flat for a long 2-metre loading area. Together, the 566-litre trunk and 44.4 litre frunk offer class-leading storage capacity.

Discover More >

Interior Design.

09



Seats that put comfort first.

The EV5’s premium seats have adaptive comfort for every drive. Choose from a range of functions to upgrade your car. Heated, ventilated and relaxation options are available.



Ambient lighting.

Step inside and the EV5 greets you with wrap-around ambient lighting flowing across the dashboard and doors. It sets the mood, adapts to drive modes and even responds to alerts.

Discover More >

Connectivity & Convenience

Seamless & smart technology.

Panoramic triple display.

Everything in view, exactly where you need it - with one seamless display combining a 12.3" driver cluster, 5.3" climate screen and 12.3" infotainment display.



The Kia AI Assistant[2].

Say “Hey Kia” to activate Kia’s AI Assistant - to receive directions, tips and support. It makes every journey smarter and more personal.

Connectivity & Convenience. 12

Fingerprint recognition.

Experience seamless, secure entry with Kia's fingerprint technology[3]. Touch the sensor and automatically unlock your driver profile, start your EV5 and restore your personalised settings. No password needed.



OTA Updates & Kia Upgrades[4].

Always evolving with you: Over-the-Air Updates keep your EV5 current at all times, while Kia Upgrades unlock new smart in-car features. No visits to your dealership needed.

Discover More >



Safety

Drive safer and with confidence.

Fitted with a host of cutting-edge driver assistance features[5], the Kia EV5 helps you stay safe and relaxed on every journey. Intelligent anti-collision sensor systems identify risks before they happen. Highway assistants protect you at speed. And parking assistants take the stress out of tight spaces.

Watch Animations >



Powertrain & Trimlines

Your EV5, your way.

Equipped with an 81.4 kWh battery[6] and available in both Front-Wheel Drive and All-Wheel Drive, the EV5 delivers dependable all-electric range and efficiency. With three trims to choose from - Air, Earth and GT-Line - you can find your perfect fit.

Discover More >



Accessories

Style up your EV5.

Tailor your EV5 to your needs and personality - with Kia's extensive range of accessories. Designed to enhance your comfort, give you added flexibility, and let you customise your car.

Check Options >

Make it yours.

Colour Line-up.

Kia EV5 Air and Earth



Ivory Silver



Iceberg Green



Iceberg Green Matte



Magma Red



Frost Blue



Snow White Pear



Fusion Black



Gravity Grey



Dark Ocean Blue

Configure Now >

Make it yours.

Colour Line-up.

Kia EV5 GT-Line



Ivory Silver



Iceberg Green



Iceberg Green Matte



Magma Red



Frost Blue



Snow White Pear



Fusion Black



Gravity Grey



Dark Ocean Blue

Configure Now >

Rims

Baseline



18" Alloy

GT-Line



19" Alloy



19" Alloy

Dimension Sketch

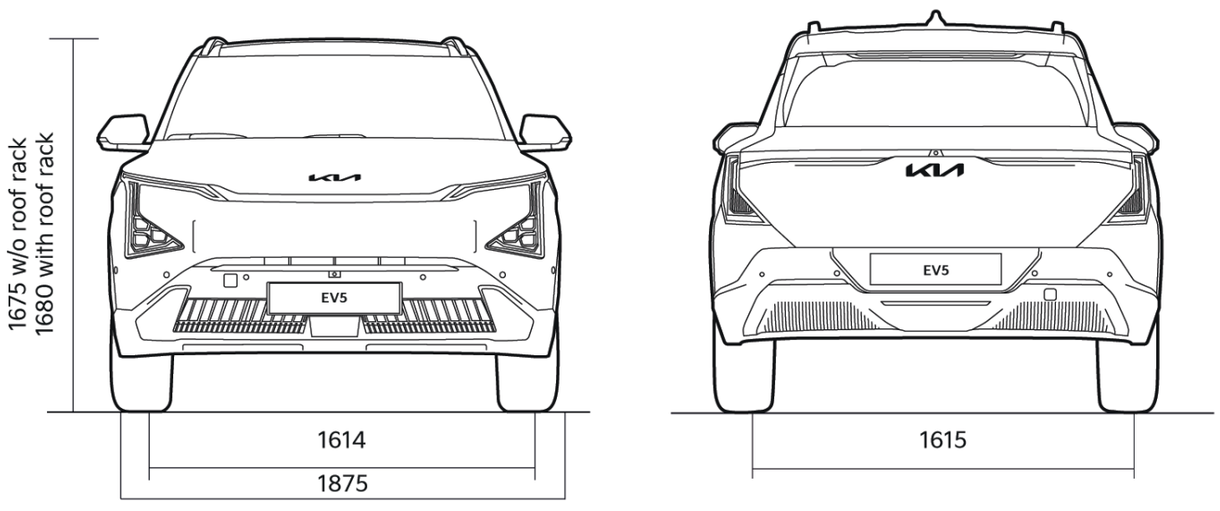

EV5 Baseline

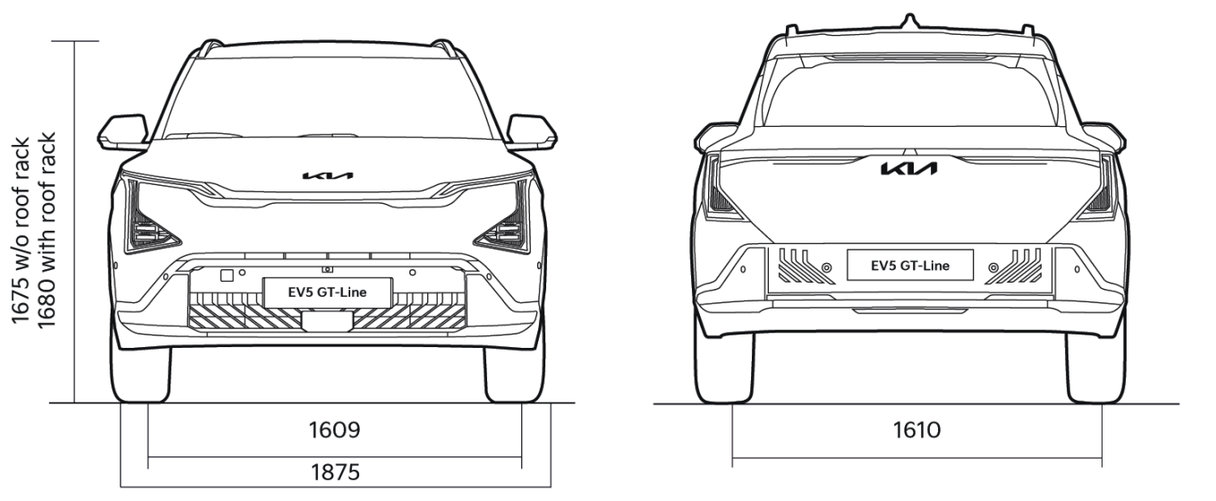

EV5 GT-Line

*Dimensions may vary slightly by trim line.

Configure Now >

Want to know more?

EV5 Experience Landing Page

Discover More >

EV5 Specification Page

Discover More >

Test Drive Registration.

Register Now >

Legal Disclaimer

Static and moving imagery are used for illustration purposes only. Final product may show differences in comparison to the images employed. The models and specifications shown in this page may vary from the models available in your market. Please contact your local Kia dealer for the most recent information.

1. Premium Relaxation Seats

Premium Relaxation Seats are available exclusively on the EV5 GT-Line variant. Please note that heated rear seats are only available as an optional feature.

2. Kia AI Assistant

The Kia AI Assistant is available as part of specific subscription packages and typically includes a one-year free trial period. Subscription fees apply thereafter. Feature availability may vary by model, specification or region. The Kia AI Assistant is currently only available in a limited number of languages (including English, German, French, Spanish, Italian and Dutch). Please check with your local Kia retailer for full details.

3. Fingerprint recognition system

Kia’s Fingerprint recognition technology is available, as an option, exclusively on the EV5 Baseline (Earth) and GT-Line variants.

4. Over-the-Air (OTA) updates & Kia Upgrades

New vehicles equipped with OTA-enabled navigation software benefit from a free trial period during which Over-the-Air updates for maps and infotainment software are provided at no additional cost. After the trial ends, further OTA updates can be accessed either via https://update.kia.com/EU/E1/Main or through a Kia dealership. Availability of OTA updates may vary by model and region. Additional features, services and content described as “Kia Upgrades” may be available for purchase separately via the Kia Connect Store, accessible through the Kia App.

5. Safety

The use of assistance and safety systems does not release the driver from the obligation to constantly monitor traffic and control the vehicle. Drivers must still adapt their driving behaviour to their personal driving skills, the legal regulations and the general road and traffic conditions.

6. Kia battery units

Kia high voltage lithium-ion battery-units in electric vehicles (EV), hybrid electric vehicles (HEV) and plug-in hybrid electric vehicles (PHEV) are built to have a long life. For EV, HEV and PHEV, Kia

guarantees that a high voltage battery will retain at least 80% capacity for a period of 5 years from the initial registration or 100,000 km, whichever comes first and at least 70% capacity for a period of 8 years from the initial registration or 160,000 km, whichever comes first.
Low voltage battery for supporting engine start is covered by Kia warranty for a period of 2 years from initial registration regardless of mileage. To minimize possible capacity reduction, follow the instructions at [...] or consult the Owner's Manual. Find full information about Kia warranty at [www.Kia.com]

Engine Audio Levels. Noise level data were determined according to the prescribed measurement procedure in accordance with Regulation (EU) No 540/2014 and Regulation No 51.03 UN/ECE [2018/798].

Kia Europe GmbH

Theodor-Heuss-Allee 11

60486 Frankfurt am Main

Germany

Movement that inspires